Rectangular Meeting Tables

Thanks to its one-piece construction metal structure, CONECT caters fully to the current trend for shared spaces that promote communication and proximity. With its angular lines and clean aesthetic design, CONECT sits comfortably within modern collaborative work environments. Additionally, a desk frame that sits slightly apart from the worktop confers a sense of lightness to this expansive desk.

Workstation comprising 4 rectangular desks resting on a shared structural storage unit. Bridge design legs.

• **Accessory rails,** page 99
• **Cupboards,** page 121
• **Ergonomic chairs,** page 195

2 workstations each comprising 2 shared structure rectangular desks, bridge legs and socket feed housings.
Individual tower pedestals.

• **Desktop screens,** page 99
• **Pedestals and multi-compartment storage units,** page 121
• **Ergonomic chairs,** page 195
• **Accessories,** page 253

Timeless & versatile

Individual desks
D. 70 or 80 cm
Desks with shared structural frame
D. 142 or 165 cm

Power and cable management solutions:
cable ports, recess in worktop or top access housing

Melamine worktops
25 mm thick
(7 choices of finish).

Desk height structural storage units, 2 sliding doors with the option of adding a counter top storage unit.

3 TYPES OF LEG DESIGN

Fixed height rectangular bridge leg
H. 73.5 cm

Fixed height rectangular frame leg
H. 73.5 cm

Height-adjustable rectangular bridge leg
H. 62 to 86 cm

FINISHES

7 choices of melamine worktop (+ top)

FROM STOCK

MG	M6	MA	R2	RI	R3	RL
Snow white	Cashmere grey	White maple	Honfleur beech wood	Light oak	Brunswick oak	Amber walnut

7 choices of metal finish for legs (+ fin.)

FROM STOCK

SO	SA	SC
White	Aluminium grey	Graphite grey

ON REQUEST

SG	X3	X5	X6
Black	Emerald green	Sunflower yellow	Carmine red

+5%

10 choices of melamine door colour (+ col.1)

FROM STOCK

MG	M6	MA	R2	RI	R3	RL
Snow white	Cashmere grey	White maple	Honfleur beech wood	Light oak	Brunswick oak	Amber walnut

ON REQUEST

M2	M4	M1
Fern green	Sunflower yellow	Cherry red

+5%

ON REQUEST: allow 6 weeks

OVERVIEW

Individual desks

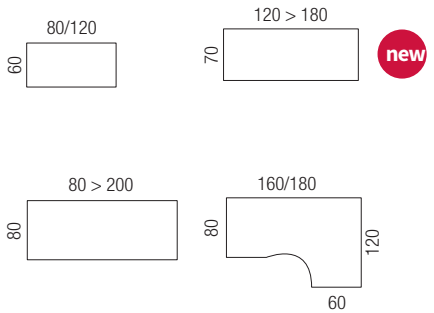

Individual desks with storage units

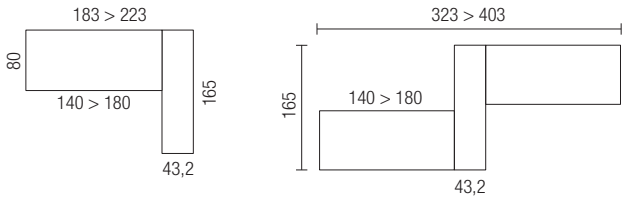

Desks with shared structural frame

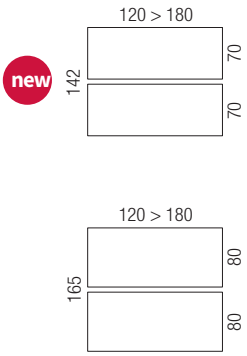

Desks with shared structural frame and storage units

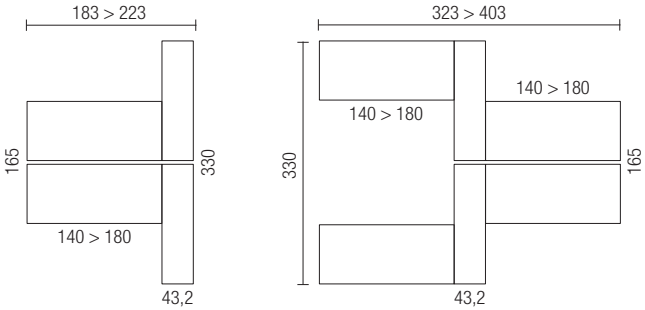

Extension units

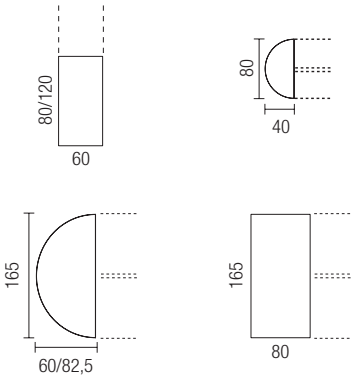

Power and cable management

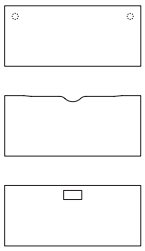

PRICES

Price excl. taxes: From stock | On request

INDIVIDUAL DESKS

	Fixed height rectangular bridge legs		Fixed height rectangular frame legs		HA* rectangular bridge legs	
	Ref. + top + fin.	Price excl. tax	Ref. + top + fin.	Price excl. tax	Ref. + top + fin.	Price excl. tax
D. 60 cm						
> Rectangular desks (without cable port openings)						
W. 80 cm	1 171 128	£ 319	1 171 191	£ 401	1 171 267	£ 372
W. 120 cm	1 171 129	£ 328	1 171 192	£ 410	1 171 268	£ 381
D. 70 cm						
> Rectangular worktops with pre-drilled openings for cable ports (sold separately - see p. 275)						
W. 120 cm	1 172 474	£ 324	1 172 495	£ 405	1 172 499	£ 376
W. 140 cm	1 172 475	£ 334	1 172 496	£ 414	1 172 500	£ 386
W. 160 cm	1 172 476	£ 343	1 172 497	£ 424	1 172 501	£ 395
W. 180 cm	1 172 477	£ 352	1 172 498	£ 434	1 172 502	£ 405
> Rectangular worktops with scallop edge. From stock availability in MG and RI finish only.						
W. 120 cm	1 172 486	£ 324	1 172 503	£ 405	1 172 506	£ 376
W. 140 cm	1 172 487	£ 334	1 172 504	£ 414	1 172 507	£ 386
W. 160 cm	1 172 488	£ 343	1 172 505	£ 424	1 172 508	£ 395
> Rectangular worktops with pre-cut openings for soft closing top access housings (see p. 275). Metal cable trough included, in a matching finish to legs.						
W. 120 cm	1 173 297	£ 352	1 173 306	£ 434	1 173 309	£ 405
W. 140 cm	1 173 298	£ 362	1 173 307	£ 443	1 173 310	£ 414
W. 160 cm	1 173 299	£ 372	1 173 308	£ 452	1 173 311	£ 424
D. 80 cm						
> Rectangular worktops with pre-drilled openings for cable ports (sold separately) Starter unit						
W. 80 cm	1 171 001	£ 324	1 171 195	£ 405	1 171 261	£ 376
W. 120 cm	1 171 002	£ 334	1 171 196	£ 414	1 171 262	£ 386
W. 140 cm	1 171 003	£ 343	1 171 197	£ 424	1 171 263	£ 395
W. 160 cm	1 171 004	£ 352	1 171 198	£ 434	1 171 264	£ 405
W. 180 cm	1 171 005	£ 362	1 171 199	£ 443	1 171 265	£ 414
W. 200 cm	1 171 825	£ 372	1 171 188	£ 452	1 171 266	£ 424
Add-on (the add-on desk unit adapts to all types of fixed height leg structures) Intermediary leg on the user side is set back.						
W. 120 cm	1 172 567	£ 266				
W. 140 cm	1 172 568	£ 277				
W. 160 cm	1 172 569	£ 286				
W. 180 cm	1 172 570	£ 295				

Power and cable management
Optional - See page 273

Top access housing
Module to be ordered separately - see page 275

** HA: Height-adjustable*

INDIVIDUAL DESKS

D. 80 cm

> **Rectangular worktops with scallop edge.** From stock availability in MG and RI finish only.

Starter unit

	Fixed height rectangular bridge legs		Fixed height rectangular frame legs		HA* rectangular bridge legs	
	Ref. + top + fin.	Price excl. tax	Ref. + top + fin.	Price excl. tax	Ref. + top + fin.	Price excl. tax
W. 120 cm	1 172 341	£ 334	1 172 370	£ 414	1 172 563	£ 386
W. 140 cm	1 172 342	£ 343	1 172 371	£ 424	1 172 564	£ 395
W. 160 cm	1 172 343	£ 352	1 172 372	£ 434	1 172 565	£ 405
W. 180 cm	1 172 344	£ 362	1 172 373	£ 443	1 172 566	£ 414

Add-on (the add-on desk unit adapts to all types of fixed height leg structures) Intermediary leg on the user side is set back

W. 120 cm	1 172 571	£ 266
W. 140 cm	1 172 572	£ 277
W. 160 cm	1 172 573	£ 286
W. 180 cm	1 172 574	£ 295

> **Rectangular worktops with pre-cut openings for soft closing top access housings** (See p. 275). **Metal cable trough included, in a matching finish to legs.** From stock availability in MG and RI finish only.

Starter unit

W. 120 cm	1 173 873	£ 362	1 173 342	£ 443	1 173 293	£ 414
W. 140 cm	1 173 874	£ 372	1 173 343	£ 452	1 173 294	£ 424
W. 160 cm	1 173 875	£ 381	1 173 344	£ 463	1 173 295	£ 434
W. 180 cm	1 173 876	£ 390	1 173 345	£ 472	1 173 296	£ 443

Add-on (the add-on desk unit adapts to all types of fixed height leg structures) Intermediary leg on the user side is set back.

W. 120 cm	1 173 346	£ 295
W. 140 cm	1 173 347	£ 305
W. 160 cm	1 173 348	£ 315
W. 180 cm	1 173 349	£ 324

> **90° asymmetrical compact desks D. 80/120 x return 60 cm. Worktops with pre-drilled openings for cable ports** (sold separately - see p. 275)

W. 160 cm						
Return on left side	1 171 053	£ 443	1 171 567	£ 524	1 171 417	£ 496
Return on right side	1 171 054	£ 443	1 171 568	£ 524	1 171 418	£ 496
W. 180 cm						
Return on left side	1 171 156	£ 452	1 171 569	£ 534	1 171 419	£ 505
Return on right side	1 171 157	£ 452	1 171 570	£ 534	1 171 420	£ 505

FINISHES

Choice of melamine finish for worktops (+ top): MG, M6, MA, R2, RI, R3, RL — FROM STOCK

Choice of metal finish for legs (+ fin.): SO, SA, SC, SG, X3, X5, X6 — ON REQUEST (X3) ON REQUEST (X5, X6) +5%

Choice of melamine doors colour (+ col.1): MG, M6, MA, R2, RI, R3, RL, M2, M4, M1 — FROM STOCK (MG–RL) ON REQUEST (M2, M4, M1) +5%

ON REQUEST: allow 6 weeks

PRICES

Price excl. taxes: From stock | On request

INDIVIDUAL DESKS
> Extension units

	Fixed height rectangular bridge legs		Fixed height rectangular frame legs		HA* rectangular bridge legs	
	Ref. + top + fin.	Price excl. tax	Ref. + top + fin.	Price excl. tax	Ref. + top + fin.	Price excl. tax
> Rectangular returns mounted on legs D. 60 cm. Can be positioned on either the left or right-hand side of rectangular desks and on the return of asymmetrical compact desks.						
W. 80 cm	1 171 061	£ 277	1 171 595	£ 315	1 171 383	£ 310
W. 120 cm	1 171 175	£ 286	1 171 596	£ 324	1 171 384	£ 319

> Returns mounted on structural pedestals D. 60 cm x W. 42 cm.
Metal pedestal with 2 box drawers and 1 suspension file drawer - Available in a choice of White SO, Aluminium grey SB and Graphite grey SC finish.

W. 80 cm	1 171 111	£ 486
W. 120 cm	1 171 113	£ 496

> Half-moon worktop on support leg D. 40 cm. Designed to be placed at the extremities of an individual desk D.80 cm Supported by 1 square section leg 60x60 mm.

W. 80 cm fixed height leg	1 171178	£ 175
W. 80 cm height-adjustable leg	1 171180	£ 204

INDIVIDUAL DESKS
> With easy reach structural storage unit

Examples of layouts/configurations (contact us for information on alternative configurations and finishes)
Melamine sliding doors - Front user side or two-sided access. Desk height storage unit shell available in a White MG or Aluminium grey MU finish, matching the corresponding White SO and Aluminium grey SA legs finish. Option to add a countertop storage unit with Altuglas® sliding doors, sold separately.

Workstation configured around a rectangular desk D. 80 cm with desk height storage unit - fixed height legs.
Worktops with pre-drilled openings for cable ports (sold separately). The desk height return can be positioned to the left or right-hand side of the main work surface.

	Bridge design legs		Frame design legs	
	Ref. + top + fin. + col. 1	Price excl. tax	Ref. + top + fin. + col. 1	Price excl. tax
> Front side user access with sliding doors				
W. 183 x D. 165 cm (Worktop 140 cm)	1 171 229	£ 962	1 171 237	£ 1001
W. 203 x D. 165 cm (Worktop 160 cm)	1 171 230	£ 972	1 171 238	£ 1010
W. 223 x D. 165 cm (Worktop 180 cm)	1 171 231	£ 981	1 171 239	£ 1019
> Two-sided user access with sliding doors				
W. 183 x D. 165 cm (Worktop 140 cm)	1 171 617	£ 991	1 171 620	£ 1029
W. 203 x D. 165 cm (Worktop 160 cm)	1 171 618	£ 1001	1 171 621	£ 1039
W. 223 x D. 165 cm (Worktop 180 cm)	1 171 619	£ 1010	1 171 622	£ 1048

Central storage unit - 2 rectangular worktops D. 80 cm with desk height storage - fixed height legs.
Worktops with pre-drilled openings for cable ports (sold separately). Pair of worktops assembled either side of the central storage unit.

	Bridge design legs		Frame design legs	
> Two-sided user access with sliding doors				
W. 323 x D. 165 cm (Worktop 140 cm)	1 171 489	£ 1277	1 171 505	£ 1301
W. 363 x D. 165 cm (Worktop 160 cm)	1 171 490	£ 1296	1 171 506	£ 1320
W. 403 x D. 165 cm (Worktop 180 cm)	1 171 491	£ 1314	1 171 507	£ 1338

Power and cable management
Optional - See page 273

Top access housing
Module to be ordered separately - see page 275

DESKS WITH SHARED STRUCTURAL FRAME

	Fixed height bridge legs STARTER UNIT		Fixed height frame legs STARTER UNIT		Fixed height legs ADD-ON	
	Ref. + top + fin.	Price excl. tax	Ref. + top + fin.	Price excl. tax	Ref. + top + fin.	Price excl. tax
D. 142 cm (2 rectangular worktops D. 70 cm)						
> Worktops with pre-drilled openings for cable ports (sold separately).			STARTER (2 perimeter legs)		ADD-ON (1 intermediary support leg)	
W. 120 cm	1 172 516	£ 524	1 172 520	£ 667	1 172 524	£ 414
W. 140 cm	1 172 517	£ 543	1 172 521	£ 686	1 172 525	£ 434
W. 160 cm	1 172 518	£ 562	1 172 522	£ 705	1 172 526	£ 452
W. 180 cm	1 172 519	£ 581	1 172 523	£ 724	1 172 527	£ 472
> Worktops with scallop edge. From stock availability in MG and RI finish only.						
W. 120 cm	1 172 536	£ 524	1 172 539	£ 667	1 172 542	£ 414
W. 140 cm	1 172 537	£ 543	1 172 540	£ 686	1 172 543	£ 434
W. 160 cm	1 172 538	£ 562	1 172 541	£ 705	1 172 544	£ 452
> Pre-cut worktops with openings for soft closing top access housings (See p. 275). Twin compartment metal cable trough included, in a matching finish to legs.						
W. 120 cm	1 173 315	£ 572	1 173 318	£ 715	1 173 321	£ 463
W. 140 cm	1 173 316	£ 591	1 173 319	£ 734	1 173 322	£ 481
W. 160 cm	1 173 317	£ 610	1 173 320	£ 753	1 173 323	£ 500
D. 165 cm (2 rectangular worktops D. 80 cm)						
> Worktops with pre-drilled openings for cable ports (sold separately).						
W. 120 cm	1 171 021	£ 543	1 171 245	£ 686	1 171 033	£ 434
W. 140 cm	1 171 022	£ 562	1 171 246	£ 705	1 171 034	£ 452
W. 160 cm	1 171 023	£ 581	1 171 247	£ 724	1 171 035	£ 472
W. 180 cm	1 171 024	£ 600	1 171 248	£ 743	1 171 036	£ 490
> Worktops with scallop edge. From stock availability in MG and RI finish only.						
W. 120 cm	1 172 357	£ 543	1 172 353	£ 686	1 172 365	£ 434
W. 140 cm	1 172 358	£ 562	1 172 354	£ 705	1 172 366	£ 452
W. 160 cm	1 172 359	£ 581	1 172 355	£ 724	1 172 367	£ 472
W. 180 cm	1 172 360	£ 600	1 172 356	£ 743	1 172 368	£ 490
> Pre-cut worktops with openings for soft closing top access housings (See p. 275). Twin compartment metal cable trough included, in a matching finish to legs. From stock availability in MG and RI finish only.						
W. 120 cm	1 173 921	£ 591	1 173 350	£ 734	1 173 929	£ 481
W. 140 cm	1 173 922	£ 610	1 173 351	£ 753	1 173 930	£ 500
W. 160 cm	1 173 923	£ 629	1 173 352	£ 771	1 173 931	£ 519
W. 180 cm	1 173 924	£ 648	1 173 353	£ 791	1 173 932	£ 538

Optional intermediary support leg.	Ref. + fin.	Price excl. tax
Set of 2 panels	2 403 835	£ 124

> Metal panel on intermediary leg for shared bench workstation (starter/add-on). In a matching finish to legs. Facilitates routing of cables down from the worktop.

FINISHES

Choice of melamine finish for worktops (+ top): MG, M6, MA, R2, RI, R3, RL — FROM STOCK

Choice of metal finish for legs (+ fin.): SO, SA, SC, SG, X3, X5, X6 — ON REQUEST (+5%) ON REQUEST

Choice of melamine doors colour (+ col.1): MG, M6, MA, R2, RI, R3, RL, M2, M4, M1 — FROM STOCK; ON REQUEST (+5%)

ON REQUEST: allow 6 weeks

PRICES

Price excl. taxes: From stock On request

DESKS WITH SHARED STRUCTURAL FRAME
> Extension units

Rectangular worktop. Rectangular worktop designed to be placed at the extremity of shared structure workstations D. 165 cm

	Fixed height rectangular bridge legs		Fixed height rectangular frame legs	
	Ref. + top + fin.	Price excl. tax	Ref. + top + fin.	Price excl. tax
W. 165 x D. 80 cm	1 171 957	£ 352	1 171 436	£ 434

Half-moon worktop on support legs. Designed to be placed at the extremity of shared structure workstations D. 165 cm.
Supported by 2 square section legs 60 x 60 mm for the D. 82.5 cm and 1 leg for D. 60 cm

	Square fixed leg(s)		Square height-adjustable leg(s)	
W. 165 x D. 60 cm	1 171 063	£ 286	1 171 174	£ 315
W. 165 x D. 82.5 cm	1 171 179	£ 295	1 171 181	£ 324

DESKS WITH SHARED STRUCTURAL FRAME
> With easy reach structural storage units

Examples of layouts/configurations (contact us for information on alternative configurations and finishes).
Melamine sliding doors - Front user side or two-sided access. Desk height storage unit shell available in a White MG or Aluminium grey MU finish, matching the corresponding White SO and Aluminium grey SA legs finish. The desk height return can be positioned to the left or right-hand side of the main work surface. Option to add a countertop storage unit with Altuglas® sliding doors, sold separately.

> Central storage unit - 4 rectangular worktops D. 80 cm with desk height storage. Worktops with pre-drilled openings for cable ports (sold separately).
2 individual worktops assembled to one side of the central storage unit and a further 2 shared structure worktops assembled to the other side.

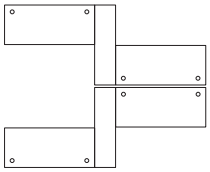

Two-sided user access with sliding doors	Bridge design legs		Frame design legs	
W. 323 x D. 330 cm (Worktop 140 cm)	1 171 497	£ 2430	1 171 513	£ 2458
W. 363 x D. 330 cm (Worktop 160 cm)	1 171 498	£ 2448	1 171 514	£ 2477
W. 403 x D. 330 cm (Worktop 180 cm)	1 171 499	£ 2468	1 171 515	£ 2497

> Desks with shared structural frame - 2 rectangular worktops D. 80 cm with desk height storage units.
1 fixed height Bridge or Frame design perimeter leg and 2 desk height structural returns.

Worktops with pre-drilled openings for cable ports (sold separately).

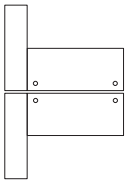

Front side user access	Bridge design legs		Frame design legs	
W. 183 x D. 330 cm (Worktop 140 cm)	1 171 397	£ 1892	1 171 445	£ 1919
W. 203 x D. 330 cm (Worktop 160 cm)	1 171 398	£ 1910	1 171 446	£ 1939
W. 223 x D. 330 cm (Worktop 180 cm)	1 171 399	£ 1930	1 171 447	£ 1958

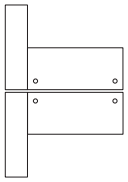

Two-sided user access				
W. 183 x D. 330 cm (Worktop 140 cm)	1 171 405	£ 1948	1 171 453	£ 1977
W. 203 x D. 330 cm (Worktop 160 cm)	1 171 406	£ 1967	1 171 454	£ 1996
W. 223 x D. 330 cm (Worktop 180 cm)	1 171 407	£ 1987	1 171 455	£ 2015

Pre-cut worktops with openings for soft closing top access housings (See p. 275). Twin compartment metal cable trough included, in a matching finish to legs. From stock availability in MG and RI finish only.

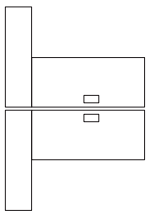

	Fixed height rectangular bridge legs		Fixed height rectangular frame legs	
	Ref. + top + fin. + col. 1	Price excl. tax	Ref. + top + fin. + col. 1	Price excl. tax
Front side user access				
W. 183 x D. 330 cm (Worktop 140 cm)	1 173 965	£ 1939	1 173 354	£ 1967
W. 203 x D. 330 cm (Worktop 160 cm)	1 173 966	£ 1958	1 173 355	£ 1987
W. 223 x D. 330 cm (Worktop 180 cm)	1 173 967	£ 1977	1 173 356	£ 2005
Two-sided user access				
W. 183 x D. 330 cm (Worktop 140 cm)	1 173 971	£ 1967	1 173 357	£ 1996
W. 203 x D. 330 cm (Worktop 160 cm)	1 173 972	£ 1987	1 173 358	£ 2015
W. 223 x D. 330 cm (Worktop 180 cm)	1 173 973	£ 2005	1 173 359	£ 2034

ACCESSORIES FOR EASY REACH STRUCTURAL STORAGE UNITS

Counter top storage unit for desk height returns.
Melamine shell in a White MG or Aluminium grey MU finish (+fin. 1) - For all other colours: contact us for details. Altuglas® sliding doors (+ col. 2).
To be placed on top of Desk Height returns - Front user side or two-sided access.

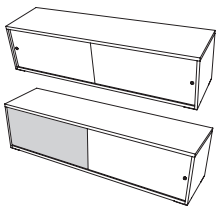

	Front side user access		Two-sided user access	
	Ref. + col. 2 + fin. 1	Price excl. tax	Ref. + col. 2 + fin. 1	Price excl. tax
H. 42.5 x W. 165 x D. 43.2 cm	1 171 529	£ 486	1 171 530	£ 519

Power and cable management
Optional - See page 273

Top access housing
Module to be ordered separately - see page 275

Choice of Altuglas® sliding door colour (+ col. 2)

OA OB O1 O4 OX

FROMSTOCK +5% ON REQUEST

FINISHES

Choice of melamine finish for worktops (+ top)

MG M6 MA R2 RI R3 RL

FROM STOCK

Choice of metal finish for legs (+ fin.)

SO SA SC SG X3 X5 X6

+5% ON REQUEST ON REQUEST

Choice of melamine doors colour (+ col.1)

MG M6 MA R2 RI R3 RL M2 M4 M1

FROM STOCK +5% ON REQUEST

ON REQUEST: allow 6 weeks